AQA

Please write clearly in block capitals.

Centre number | | | | | | Candidate number | | | | |

Surname _____

Forename(s) _____

Candidate signature _____
I declare this is my own work.

A-level
COMPUTER SCIENCE

Paper 2

Tuesday 9 June 2020 Morning Time allowed: 2 hours 30 minutes

Materials
For this paper you must have:
- a calculator.

Instructions
- Use black ink or black ball-point pen.
- Fill in the boxes at the top of this page.
- Answer **all** questions.
- You must answer the questions in the spaces provided. Do not write outside the box around each page or on blank pages.
- If you need extra space for your answer(s), use the lined pages at the end of this book. Write the question number against your answer(s).
- Do all rough work in this book. Cross through any work you do not want to be marked.

Information
- The marks for questions are shown in brackets.
- The maximum mark for this paper is 100.

Advice
- In some questions you are required to indicate your answer by completely shading a lozenge alongside the appropriate answer as shown.
- If you want to change your answer you must cross out your original answer as shown.
- If you wish to return to an answer previously crossed out, ring the answer you now wish to select as shown.

For Examiner's Use	
Question	Mark
1	
2	
3	
4	
5	
6	
7	
8	
9	
10	
11	
TOTAL	

Do not write outside the box

Answer **all** questions.

0 1 . 1 A sound has been sampled and recorded. The sound was sampled for 1 minute and 40 seconds at a sample rate of 8000 Hz with a 16-bit sample resolution.

A sample rate of 1 Hz means that one sample has been taken every second.

Calculate the minimum amount of storage space, **in bytes**, needed to store the sampled sound.

You should show your working.

[2 marks]

Answer _____

0 1 . 2 An analogue to digital converter (ADC) was used during the sampling process.

Explain the principles of operation of an ADC.

[2 marks]

_____

4

Do not write outside the box

0 2 Questions **02.2**, **02.3**, **02.4** and **02.5** use a normalised floating point representation with a 7-bit mantissa and a 5-bit exponent, both stored using **two's complement**.

0 2 . 1 Non-integer values such as -1.65 and 23/1068 can be represented by a computer using a fixed point or a floating point system.

State **one** advantage of using a floating point system over a fixed point system and **one** advantage of using a fixed point system over a floating point system.

You should assume that the two systems use the same number of bits to store a value.

[2 marks]

Advantage of floating point _____

_____

_____

_____

Advantage of fixed point _____

_____

_____

_____

0 2 . 2 The following is a floating point representation of a number:

1 ●	0	1	0	1	0	0

Mantissa

1	1	1	0	1

Exponent

Calculate the decimal equivalent of the number.

Express your answer to at least four decimal places or as a fraction. You should show your working.

[2 marks]

_____

_____

_____

_____

Answer _____

Turn over ►

Do not write outside the box

Questions **02.2**, **02.3**, **02.4** and **02.5** use a normalised floating point representation with a 7-bit mantissa and a 5-bit exponent, both stored using **two's complement**.

0 2 . 3 Write the normalised floating point representation of the decimal value 1632 in the boxes below.

You should show your working.

[3 marks]

Answer

●											
Mantissa						Exponent					

Do not write outside the box

Questions **02.2**, **02.3**, **02.4** and **02.5** use a normalised floating point representation with a 7-bit mantissa and a 5-bit exponent, both stored using **two's complement**.

0 2 . 4 State, in **decimal**, the highest (most positive) and lowest (most negative) values that could be represented by this floating point system.

You should show your working.

[3 marks]

Highest value _____ Lowest value _____

0 2 . 5 When the decimal value 28.25 is converted into binary using this floating point system, a rounding error occurs.

Explain:

- why a rounding error has occurred, **and**
- what the system might do when the value 28.25 is converted into binary.

[2 marks]

12

Do not write outside the box

0 3 . 1 **Figure 1** shows how some of the components inside a computer are connected together. The computer uses the von Neumann architecture. Some of the names of components have been omitted from **Figure 1** and replaced with the numbers ❶ to ❺

Figure 1

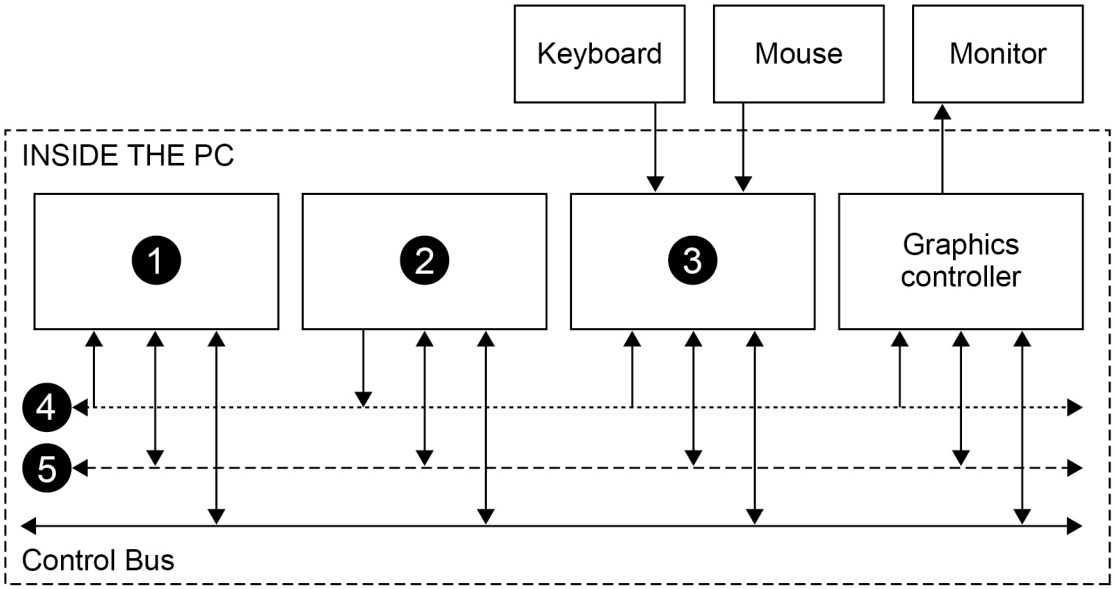

Complete **Table 1** by writing in the **Component Number** column the numbers from **Figure 1** that correspond to the **Component Names**.

[2 marks]

Table 1

Component Name	Component Number (1–5)
Address Bus	
Data Bus	
Main Memory	
Processor	
USB I/O Controller	

Do not write outside the box

0 3 . 2 The computer has 4 gibibytes of memory installed. How many kibibytes is this equivalent to?

[1 mark]

Answer _____

0 3 . 3 A tablet computer uses the Harvard architecture. Describe **two** advantages of using the Harvard architecture compared to the von Neumann architecture.

[2 marks]

Advantage 1 _____

Advantage 2 _____

Question 3 continues on the next page

Do not write outside the box

0 3 . 4 The diagram in **Figure 2** describes the fetch part of the Fetch-Execute cycle. Some of the names of registers have been omitted from the figure and replaced with the numbers ❶ to ❸

Figure 2

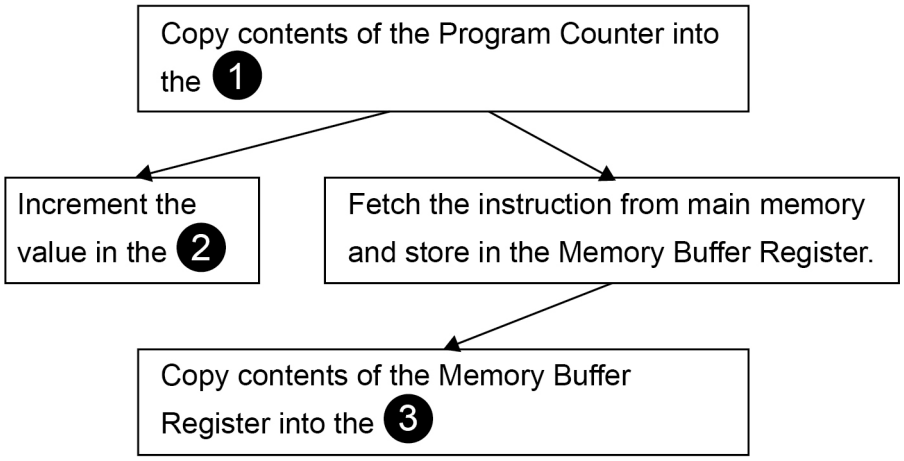

State the **full names** of the registers that should appear in the diagram where the numbers are.

[2 marks]

Number	Full Name of Register
❶	
❷	
❸	

0 3 . 5 Interrupts can be generated by devices connected to the processor during the Fetch-Execute cycle.

Describe the role of interrupts.

[2 marks]

Do not write outside the box

0 3 . 6 Explain why the volatile environment (the contents of registers) must be saved before an interrupt is serviced.

[2 marks]

0 3 . 7 Explain the relationship between hardware and software.

[1 mark]

12

Turn over for the next question

Do not write outside the box

0 4 An estate agency makes details of the properties that it has for sale available to potential customers through a website. The details of the properties and other data that are useful to the agency are stored in a relational database.

The individual web pages about specific properties that a customer can view are generated dynamically by a program from the data in the database.

A client-server system, which uses CRUD and REST, is used to provide details of properties in a web page that is being viewed in a web browser on a client computer.

Figure 3 shows the structure of the relations in the database.

Figure 3

Property(PropertyID, HouseNum, Street, Area, Postcode, Bedrooms, Bathrooms, AskingPrice, SellerID)

Seller(SellerID, Title, Forename, Surname, Telephone)

Buyer(BuyerID, Title, Forename, Surname, Telephone, DesiredArea, MinBedrooms, MaxPrice)

Viewing(BuyerID, PropertyID, ViewingDate, ViewingTime)

Sale(SaleID, PropertyID, BuyerID, SalePrice)

- The Property relation stores details of the properties that are for sale. This includes the number of bedrooms and the number of bathrooms that a property has.
- The Seller relation stores details of people who are selling the properties.
- The Buyer relation stores details of the people who are looking to buy a property and information about the type of property they want, including the area that they want to live in, the minimum number of bedrooms that they need in a property and the maximum price that they are prepared to pay.
- An entry is made in the Viewing relation whenever a buyer arranges to look at a property.
- An entry is made in the Sale relation whenever a property is sold to a buyer. The SalePrice may be different to the AskingPrice for the property.

0 4 . 1 The list below contains four statements about the principles of CRUD and REST. One of these statements is false.

Shade **one** lozenge to indicate which statement is **false**.

[1 mark]

A CRUD is an acronym for Create, Retrieve, Update, Delete. ⬭

B REST allows JavaScript to communicate with the server using the HTTP protocol. ⬭

C The database is connected to the web browser using REST. ⬭

D The REST API will be created and run on the client computer. ⬭

Do not write outside the box

An SQL query is executed to retrieve some details about properties with at least four bedrooms in a particular area. The following two records are found:

PropertyID	HouseNum	Street	Bedrooms
8026	12	Chester Drive	4
9034	23a	Castle Street	5

These records could be sent from the server to the client using XML or JSON.

Figure 4 shows the query results encoded using each of these methods.

Figure 4

Representation 1

```
{"Properties":[
  { "PropertyID": 8026,
    "HouseNum": "12",
    "Street": "Chester Drive",
    "Bedrooms": 4 },
  { "PropertyID": 9034,
    "HouseNum": "23a",
    "Street": "Castle Street",
    "Bedrooms": 5 }
]}
```

Representation 2

```
<Properties>
  <Property>
    <PropertyID>8026</PropertyID>
    <HouseNum>12</HouseNum>
    <Street>Chester Drive</Street>
    <Bedrooms>4</Bedrooms>
  </Property>
  <Property>
    <PropertyID>9034</PropertyID>
    <HouseNum>23a</HouseNum>
    <Street>Castle Street</Street>
    <Bedrooms>5</Bedrooms>
  </Property>
</Properties>
```

0 4 . 2 Shade **one** lozenge to identify the method of encoding used by **Representation 2**.

[1 mark]

A JSON ⬭

B XML ⬭

0 4 . 3 State **two** reasons why it could be argued that JSON is better than XML.

[2 marks]

Reason 1 _____

_____

_____

Reason 2 _____

_____

_____

Do not write outside the box

0 4 . 4 A composite primary key has been selected for the Viewing relation. This consists of the attributes BuyerID, PropertyID and ViewingDate.

In selecting these attributes to form the primary key, what assumption has the database designer made about the behaviour of the buyers?

[1 mark]

Figure 3 is repeated below so that you can answer Question **04.5** without having to turn back in the question paper.

Figure 3

Property(PropertyID, HouseNum, Street, Area, Postcode, Bedrooms, Bathrooms, AskingPrice, SellerID)

Seller(SellerID, Title, Forename, Surname, Telephone)

Buyer(BuyerID, Title, Forename, Surname, Telephone, DesiredArea, MinBedrooms, MaxPrice)

Viewing(BuyerID, PropertyID, ViewingDate, ViewingTime)

Sale(SaleID, PropertyID, BuyerID, SalePrice)

0 4 . 5 Write an SQL query that will retrieve from the database the list of all properties that the buyer with BuyerID 23 might be interested in buying. The properties should:

- be in the buyer's desired area
- have at least the minimum number of bedrooms the buyer requires
- cost no more than the maximum price that the buyer is prepared to pay.

The list of properties returned should only include, for each property, the following details:

- the PropertyID
- the street that the property is on
- the number of bedrooms that the property has
- the asking price for the property.

The list should be ordered with the most expensive property at the top of the list and the least expensive at the bottom of the list.

[5 marks]

Do not write outside the box

10

Do not write outside the box

0 5 **Figure 5** shows a computer (**Computer A**) which is located on a LAN in the UK. It is connected, via the Internet, to an email server (**Computer B**) which is located on a LAN in Belgium.

Computer A has IP address 192.168.2.3 and **Computer B** has the public IP address 141.134.27.8

Figure 5

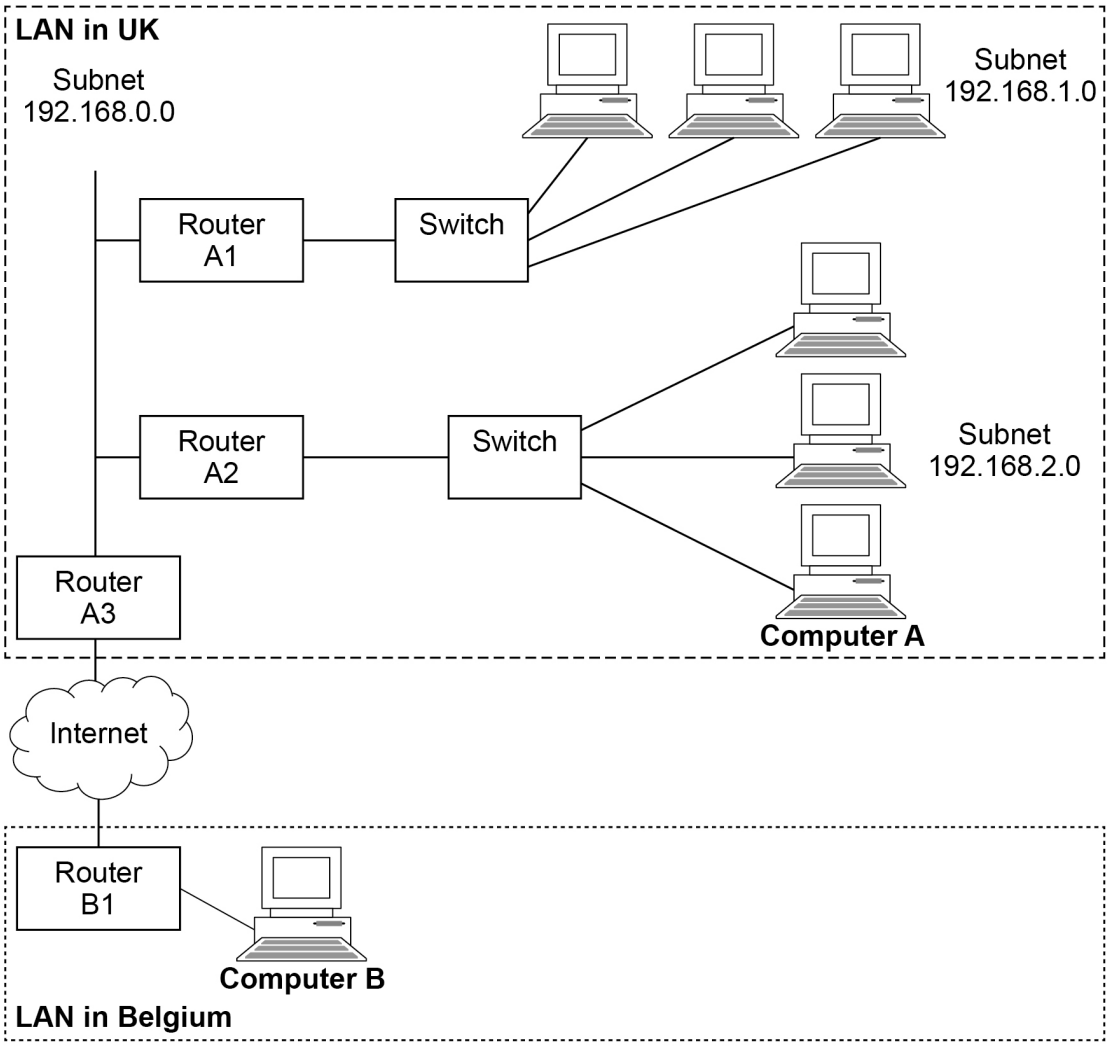

0 5 . 1 The computers on subnet 192.168.2.0 have been configured using the DHCP system.

State **one** advantage of using the DHCP system.

[1 mark]

Do not write outside the box

0 5 . 2 **Computer A** has the IP address 192.168.2.3

Many other computers connected to the Internet have the same IP address.

Explain how two or more computers connected to the Internet can have the same IP address and still communicate with each other.

[2 marks]

0 5 . 3 In addition to routing, **Router A3** also acts as a firewall to protect the computers on the LAN in the UK.

Explain **four** different ways that a firewall can protect computers on a LAN.

[4 marks]

Do not write outside the box

0 5 . 4 A packet of data is to be transmitted across the Internet from **Computer A** in the UK to **Computer B** in Belgium. A checksum will be used to attempt to detect if any errors have occurred during the transmission.

Explain how:

- **Computer A** will use a subnet mask to determine whether or not it can send the packet directly to **Computer B** across the LAN or if the packet must be sent via the Internet
- the packet will be routed across the Internet
- the checksum can be used to determine if the received packet has been changed during the transmission.

In your answer you will be assessed on your ability to follow a line of reasoning to produce a coherent, relevant and structured response.

[12 marks]

Do not write outside the box

19

Turn over ►

Do not write outside the box

0 6 . 1 **Figure 6** shows truth tables for four logic gates. The truth tables are labelled **Table A**, **Table B**, **Table C** and **Table D**.

Figure 6

Table A		
Inputs		**Output**
0	0	1
0	1	0
1	0	0
1	1	0

Table B		
Inputs		**Output**
0	0	0
0	1	1
1	0	1
1	1	0

Table C		
Inputs		**Output**
0	0	1
0	1	0
1	0	0
1	1	1

Table D		
Inputs		**Output**
0	0	0
0	1	1
1	0	1
1	1	1

Shade in **one** lozenge to indicate which truth table **does not** represent one of the logic gates: OR, XOR, NOR.

[1 mark]

Table A ⬭

Table B ⬭

Table C ⬭

Table D ⬭

Do not write outside the box

Question 6 continues on the next page

DO NOT WRITE ON THIS PAGE
ANSWER IN THE SPACES PROVIDED

Do not write outside the box

A 7-segment display is a component used to display a digit on devices such as calculators. A 7-segment display consists of seven lights (called segments) which can be illuminated individually to make the shapes of digits. For example, the digit 3 could be displayed by illuminating five of the seven segments like this (black shading indicates an illuminated segment):

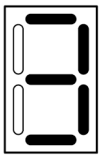

Figure 7 shows part of a logic circuit which is designed to take a binary representation of a single decimal digit as its input and light up the segments to display the decimal digit. The part of the circuit shown controls the lighting of **just one segment** of the display.

Figure 7

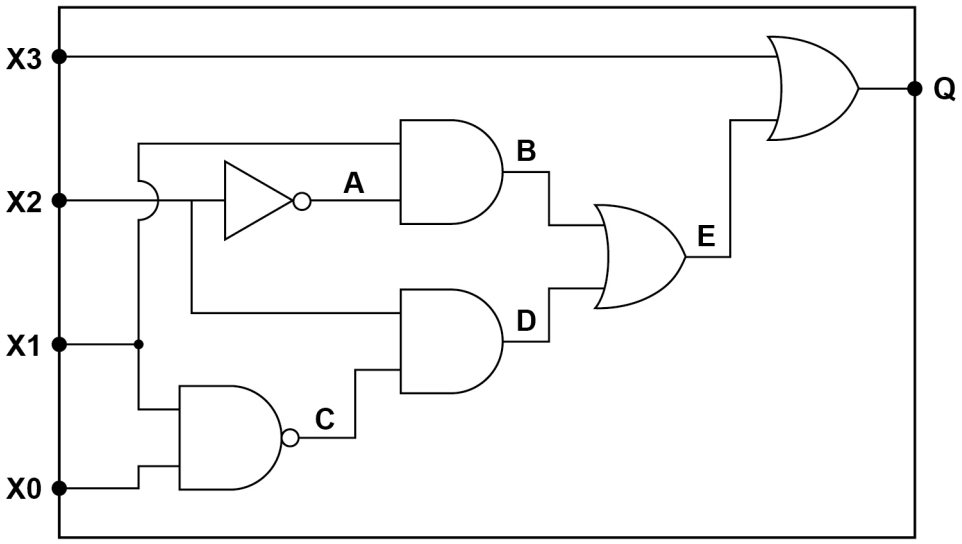

The inputs to the circuit are **X3**, **X2**, **X1** and **X0**. Together these form the binary representation of the decimal digit to display. For example, if the inputs to the circuit were:

X3	X2	X1	X0
0	1	0	1

then the display would need to show this pattern:

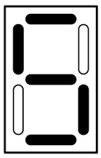

as 0101 is the binary representation of the decimal digit 5

The output **Q** is connected to one segment of the display. When **Q** is 1 this segment lights up, when it is 0 the segment does not light up.

Do not write outside the box

0 6 . 2 Complete every empty cell in the truth table below for the circuit in **Figure 7**

- The listed inputs to the table (**X3**, **X2**, **X1**, **X0**) represent the decimal digits 0–9 in binary, which are the only allowed inputs.
- The letters **A**–**E** have been used to label intermediate points on the circuit in **Figure 7** to help you to work out the final output **Q**
- Some of the cells have been completed for you.

[4 marks]

INPUTS				INTERMEDIATE POINTS					OUTPUT
X3	**X2**	**X1**	**X0**	**A**	**B**	**C**	**D**	**E**	**Q**
0	0	0	0						
0	0	0	1	1	0	1	0	0	0
0	0	1	0						
0	0	1	1	1	1	0	0	1	1
0	1	0	0						
0	1	0	1	0	0	1	1	1	1
0	1	1	0	0	0	1	1	1	1
0	1	1	1						
1	0	0	0	1	0	1	0	0	1
1	0	0	1						

Figure 8 shows the patterns of segments that are illuminated for each of the decimal digits 0–9.

Figure 8

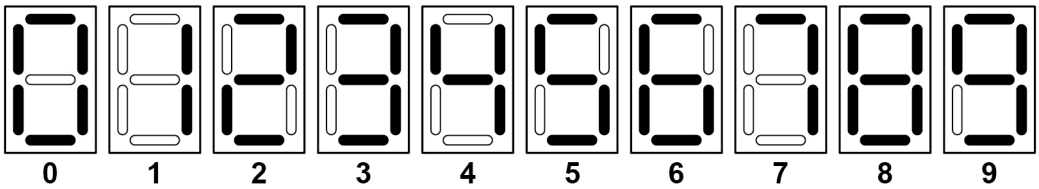

0 6 . 3 By considering the inputs and outputs of the circuit in **Figure 7** and consulting your trace table, state which of the segments in the display (labelled **a** to **g** below) the output **Q** from the circuit is controlling.

[1 mark]

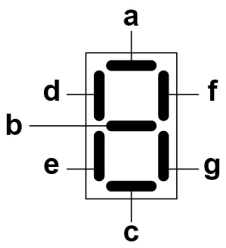

Output **Q** is controlling segment _____

Turn over ►

Do not write outside the box

0 6 . 4 Using the rules of Boolean algebra, simplify the following Boolean expression.

$$\overline{\overline{A \cdot (A + 1)} \cdot \overline{B}} \cdot \overline{\overline{A} + \overline{B + 0}}$$

You **must** show your working.

[4 marks]

Answer

10

Do not write outside the box

0 7 . 1 One of the numbers listed below is a member of the set of integers, the set of rational numbers and the set of real numbers, but **is not** a member of either the set of irrational numbers or the set of natural numbers.

Shade **one** lozenge to indicate which number this is.

[1 mark]

A –43

B $\frac{12}{35}$

C 87

D 107.834

0 7 . 2 Shade **one** lozenge to indicate which type of number would be most appropriate to use to measure the length of an item, such as a piece of rope.

[1 mark]

A Integer

B Irrational

C Natural

D Rational

E Real

2

Turn over for the next question

Do not write outside the box

0 8 A warehouse stores products that are waiting to be delivered to supermarkets. The products are packed onto pallets. For example, a pallet might hold 120 boxes of washing powder. All of the products on one pallet are of the same type.

The individual products on the pallets could be identified by labelling them individually with barcodes or by attaching RFID (radio-frequency identification) tags to them.

Each barcode/RFID tag would store a representation of a ProductID number that uniquely identifies the type of product (eg 102546 might represent a specific brand and box size of washing powder) together with an ItemID number that is unique to the specific item (eg box number 1 of the washing powder, box number 2 of the washing powder etc).

Figure 9 shows an example of five boxes of washing powder loaded onto a pallet and their ProductID and ItemID values.

Figure 9

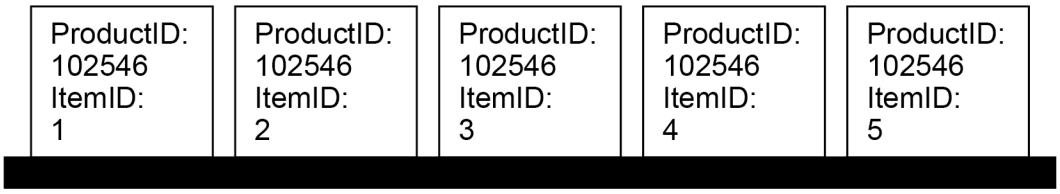

Figure 10 shows an excerpt from the simple database table that stores the details of the products that the warehouse has in stock.

Figure 10

ProductID	Description	QuantityInStock
102546	Washing Powder 1kg box	10 000
398352	Baked Beans 455g tin	1450
293820	Large Dishcloths	300

Some pallets delivered to the warehouse will be of products that already exist in the database table. Other deliveries will be of pallets of items that don't exist in the table because the warehouse has not stocked them before.

Do not write outside the box

0 8 . 1 Explain why the warehouse owners might prefer the individual products to be identified using RFID tags.

[2 marks]

0 8 . 2 Explain why the product manufacturers or supermarket owners might prefer the individual products to be identified using barcode labels.

[2 marks]

Question 8 continues on the next page

Do not write outside the box

0 8 . 3 Describe how an RFID reader would read the ProductID and ItemID values from RFID tags as pallets are delivered and explain how this data could be used to update the database table that stores details of the products that the warehouse has in stock.

You should include in your description references to the type(s) of SQL statements (eg INSERT, SELECT, UPDATE) that could be used and their purpose, but you do **not** need to write any SQL code.

[6 marks]

10

Do not write outside the box

0 9 **Figure 11** shows the format of a machine code instruction for a particular processor and one instruction in that format.

Figure 11

Opcode						Operand									
Basic Machine Operation					Addressing Mode										
1	0	0	1	1	1	1	0	0	1	1	1	1	0	1	0

0 9 . 1 If the operand can be used to refer to any location in the memory, how many memory locations can the processor address?

[1 mark]

0 9 . 2 One of the two addressing modes that the processor supports is immediate addressing.

Explain what is meant by immediate addressing.

[1 mark]

Question 9 continues on the next page

Do not write outside the box

Table 2 – Standard AQA assembly language instruction set

LDR Rd, <memory ref>	Load the value stored in the memory location specified by <memory ref> into register d.
STR Rd, <memory ref>	Store the value that is in register d into the memory location specified by <memory ref>.
ADD Rd, Rn, <operand2>	Add the value specified in <operand2> to the value in register n and store the result in register d.
SUB Rd, Rn, <operand2>	Subtract the value specified by <operand2> from the value in register n and store the result in register d.
MOV Rd, <operand2>	Copy the value specified by <operand2> into register d.
CMP Rn, <operand2>	Compare the value stored in register n with the value specified by <operand2>.
B <label>	Always branch to the instruction at position <label> in the program.
B <condition> <label>	Branch to the instruction at position <label> if the last comparison met the criterion specified by <condition>. Possible values for <condition> and their meanings are: EQ: equal to NE: not equal to GT: greater than LT: less than
AND Rd, Rn, <operand2>	Perform a bitwise logical AND operation between the value in register n and the value specified by <operand2> and store the result in register d.
ORR Rd, Rn, <operand2>	Perform a bitwise logical OR operation between the value in register n and the value specified by <operand2> and store the result in register d.
EOR Rd, Rn, <operand2>	Perform a bitwise logical XOR (exclusive or) operation between the value in register n and the value specified by <operand2> and store the result in register d.
MVN Rd, <operand2>	Perform a bitwise logical NOT operation on the value specified by <operand2> and store the result in register d.
LSL Rd, Rn, <operand2>	Logically shift left the value stored in register n by the number of bits specified by <operand2> and store the result in register d.
LSR Rd, Rn, <operand2>	Logically shift right the value stored in register n by the number of bits specified by <operand2> and store the result in register d.
HALT	Stops the execution of the program.

Labels: A label is placed in the code by writing an identifier followed by a colon (:). To refer to a label the identifier of the label is placed after the branch instruction.

Interpretation of <operand2>

<operand2> can be interpreted in two different ways, depending on whether the first character is a # or an R:

- # – use the decimal value specified after the #, eg #25 means use the decimal value 25
- Rm – use the value stored in register m, eg R6 means use the value stored in register 6

The available general-purpose registers that the programmer can use are numbered 0–12

Do not write outside the box

0 9 . 3 The Vernam cipher encrypts a plaintext character by performing a logical operation between a character in the plaintext and part of the key.

Write an assembly language program, **using the AQA assembly language instruction set** shown on page 28 in **Table 2**, to encrypt a plaintext character using this method.

You should assume that:

- the character code of the plaintext character to be encrypted is stored in memory location 101
- the part of the key to use to encrypt the character is stored in memory location 102

The encrypted ciphertext character should be stored in memory location 103

[3 marks]

Question 9 continues on the next page

Do not write outside the box

0 9 . 4 A message has been encrypted using the Caesar cipher with a key value of 5

Using the Caesar cipher, each capital letter is replaced by another capital letter (as determined by the key value) whenever it is encrypted or decrypted.

The pseudocode in **Figure 12** is supposed to decrypt a single capital letter character in the message, but it does not work properly.

Figure 12

```
asciicode ← CHAR_TO_INT(ciphertextcharacter)
asciicode ← asciicode - 5
plaintextcharacter ← INT_TO_CHAR(asciicode)
```

- `CHAR_TO_INT` is a function that returns the ASCII code of a character.
- `INT_TO_CHAR` is a function that returns the character corresponding to an ASCII code.

The ASCII code for capital letters is shown in **Figure 13**.

Figure 13

Letter	ASCII Code	Letter	ASCII Code
A	65	N	78
B	66	O	79
C	67	P	80
D	68	Q	81
E	69	R	82
F	70	S	83
G	71	T	84
H	72	U	85
I	73	V	86
J	74	W	87
K	75	X	88
L	76	Y	89
M	77	Z	90

By analysing the pseudocode in **Figure 12**, explain what the problem with the algorithm represented by the pseudocode is **and** how it could be rectified.

[3 marks]

8

Do not write outside the box

Turn over for the next question

DO NOT WRITE ON THIS PAGE
ANSWER IN THE SPACES PROVIDED

Do not write outside the box

1 0 A company provides a social media service through which members can share information about themselves and view information and news from their friends.

The service also displays current affairs news stories to its members. The service does not have journalists who write the stories but instead it uses algorithms to select news stories written by other organisations and individuals and shows these. Different news stories may be shown to different members.

Discuss:

- how algorithms might determine which current affairs news stories to display to an individual member
- the moral, ethical and legal considerations that the developers of the system and its operators should consider in relation to how the algorithms work and which news stories are displayed.

[6 marks]

Do not write outside the box

6

Turn over for the next question

Do not write outside the box

1 1 . 1 The list `towers` is defined as:

```
towers = ["Blackpool", "Paris", "New Brighton", "Toronto"]
```

What are the head and tail of this list?

[1 mark]

Head _____

Tail _____

1 1 . 2 **Figure 14** shows some code written in a functional programming language.

Figure 14

```
total [] = 0
total (x:xs) = x + total (xs)
```

The following notes are provided to help you understand the syntax of the code in **Figure 14**:

- `[]` is the empty list
- `(x:xs)` as the argument to a function splits a list into two parts, the head `x` and tail `xs`.

Describe how the `total` function works to add up all of the numbers in a list.

[3 marks]

_____

_____

_____

_____

_____

_____

_____

_____

_____

_____

_____

Do not write outside the box

Functional programming languages support higher-order functions such as `map` and `fold`.

1 1 . 3 Explain what a higher-order function is.

[2 marks]

_____

_____

_____

_____

_____

_____

1 1 . 4 What is the result of this application of the `fold` function?

```
fold (*) 1 [2, 3, 2]
```

[1 mark]

Result _____

7

END OF QUESTIONS

Do not write outside the box

There are no questions printed on this page

DO NOT WRITE ON THIS PAGE
ANSWER IN THE SPACES PROVIDED

Do not write outside the box

Question number	**Additional page, if required.** **Write the question numbers in the left-hand margin.**

Do not write outside the box

Question number	**Additional page, if required.** **Write the question numbers in the left-hand margin.**

Do not write outside the box

Question number	**Additional page, if required.** **Write the question numbers in the left-hand margin.**

Do not write outside the box

There are no questions printed on this page

DO NOT WRITE ON THIS PAGE
ANSWER IN THE SPACES PROVIDED

Copyright information

For confidentiality purposes, all acknowledgements of third-party copyright material are published in a separate booklet. This booklet is published after each live examination series and is available for free download from www.aqa.org.uk.

Permission to reproduce all copyright material has been applied for. In some cases, efforts to contact copyright-holders may have been unsuccessful and AQA will be happy to rectify any omissions of acknowledgements. If you have any queries please contact the Copyright Team.

Copyright © 2020 AQA and its licensors. All rights reserved.